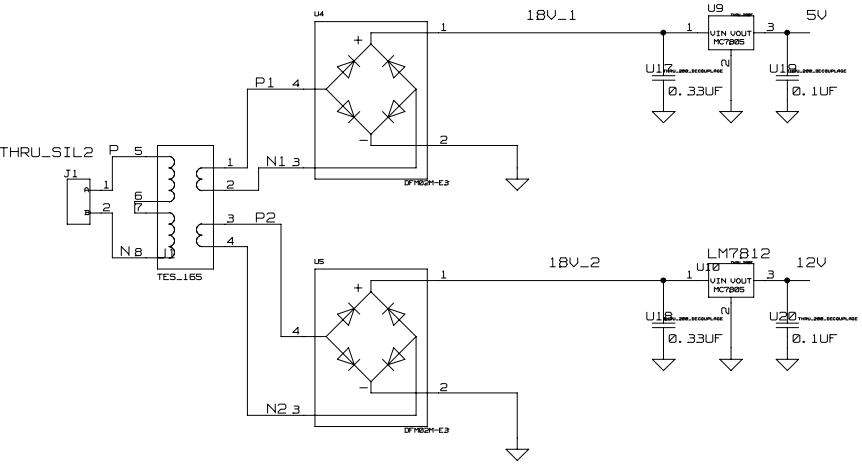
THRU_SIL2
J1
TES_165
P1
N1
P2
N2
U4
U5
DFM02M-E3
18V_1
18V_2
U9
U10
VIN VOUT
MC7805
LM7812
U17
U18
U19
U20
0.33UF
0.1UF
5V
12V

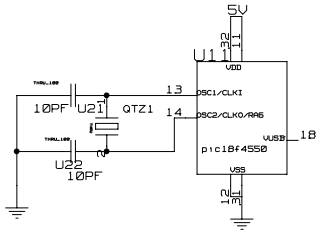
5V
U11
VDD
OSC1/CLKI
OSC2/CLKO/RA6
VUSB
VSS
pic18f4550
10PF
U21
QTZ1
U22
10PF

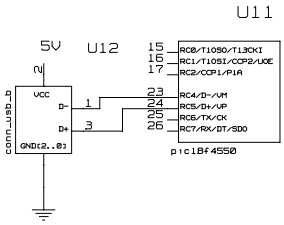
5V
U12
VCC
D-
D+
GND(2..0)
conn_usb_b
U11
RC0/T1OSO/T13CKI
RC1/T1OSI/CCP2/UOE
RC2/CCP1/P1A
RC4/D-/VM
RC5/D+/VP
RC6/TX/CK
RC7/RX/DT/SDO
pic18f4550

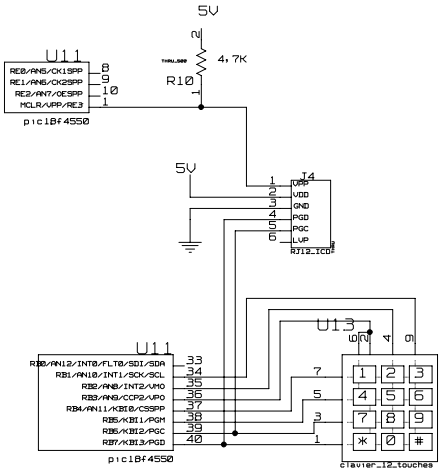
5V
U11
RE0/AN5/CK1SPP
RE1/AN6/CK2SPP
RE2/AN7/OESPP
MCLR/VPP/RE3
pic18f4550
4,7K
R10
J4
VDD
GND
PGD
PGC
LVP
RJ12_ICD
U13
RB0/AN12/INT0/FLT0/SDI/SDA
RB1/AN10/INT1/SCK/SCL
RB2/AN8/INT2/VMO
RB3/AN9/CCP2/VPO
RB4/AN11/KBI0/CSSPP
RB5/KBI1/PGM
RB6/KBI2/PGC
RB7/KBI3/PGD
clavier_12_touches

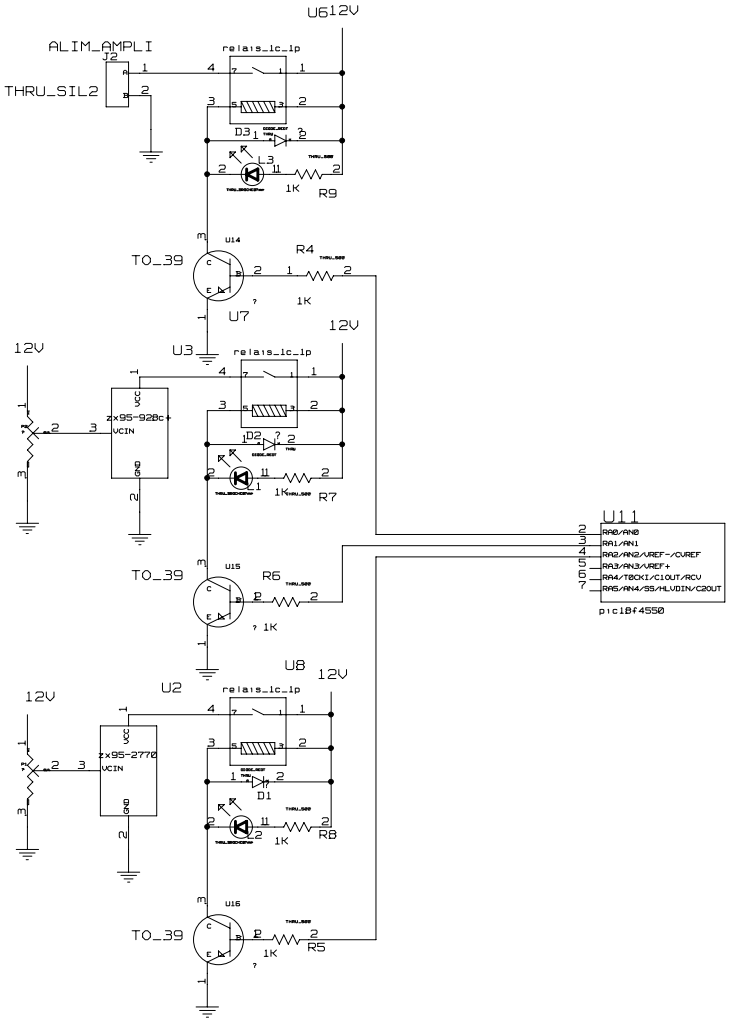
ALIM_AMPLI
THRU_SIL2
J2
U6
12V
relais_lc_1p
D3
L3
1K
R9
U14
TO_39
R4
U7
U3
D2
R7
zx95-92Bc+
VCIN
U15
R6
U11
RA0/AN0
RA1/AN1
RA2/AN2/VREF-/CVREF
RA3/AN3/VREF+
RA4/T0CKI/C1OUT/RCV
RA5/AN4/SS/HLVDIN/C2OUT
pic18f4550
U8
U2
zx95-2770
D1
R8
U16
R5

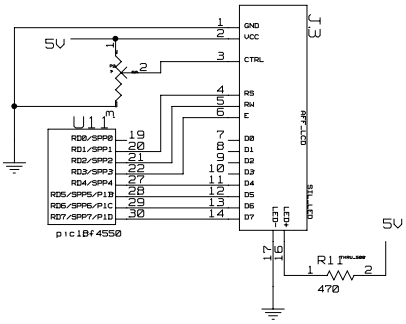
5V
U11
RD0/SPP0
RD1/SPP1
RD2/SPP2
RD3/SPP3
RD4/SPP4
RD5/SPP5/P1B
RD6/SPP6/P1C
RD7/SPP7/P1D
pic18f4550
J3
GND
VCC
CTRL
RS
RW
E
D0
D1
D2
D3
D4
D5
D6
D7
LCD_LED
R1
470